NOTE:
ALL CATCH LIFT OFF LID.

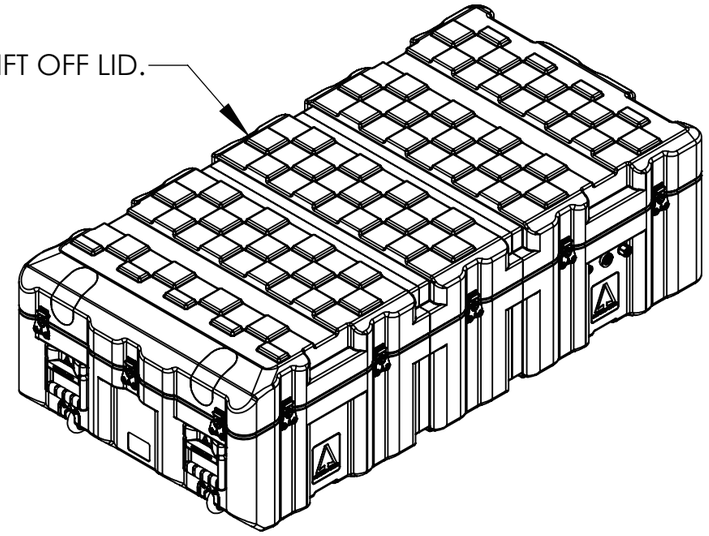

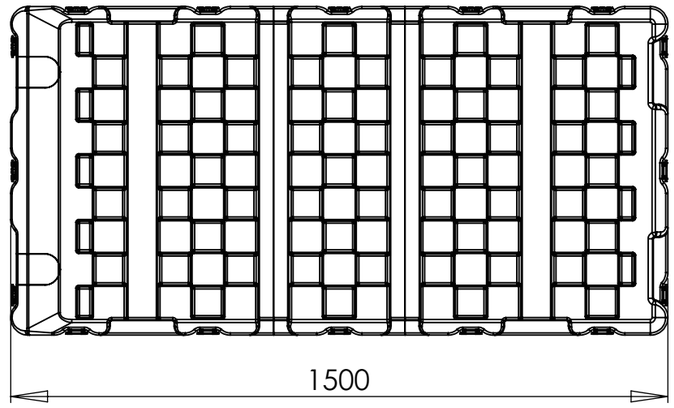

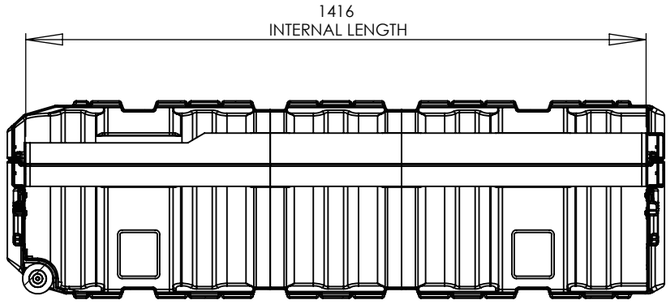

SECTION Y-Y
SCALE 1 : 14

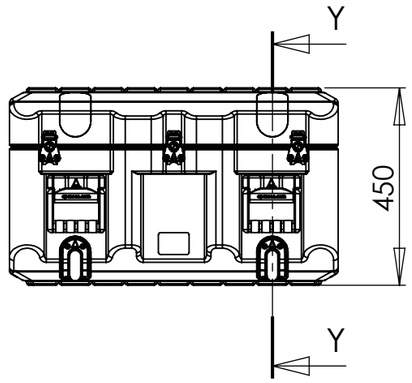

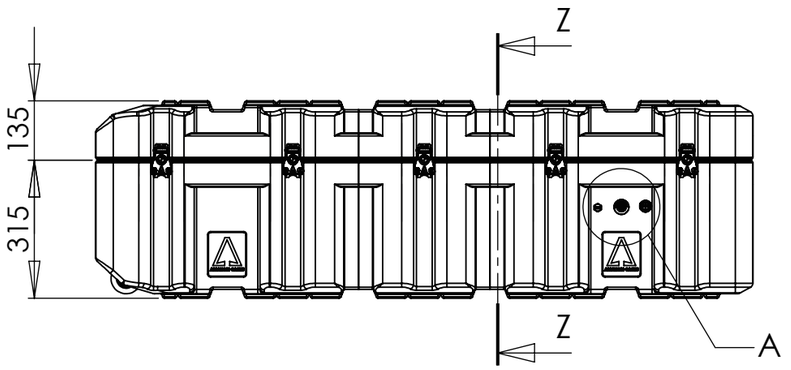

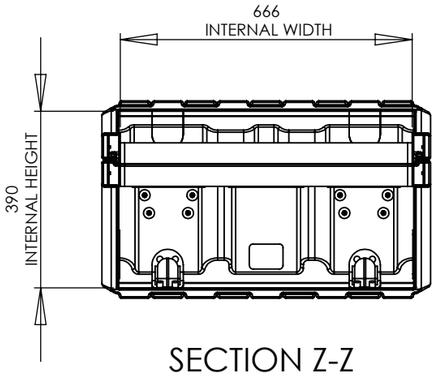

SECTION Z-Z
SCALE 1 : 14

DETAIL A
SCALE 1 : 5

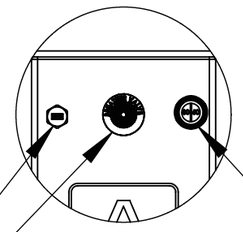

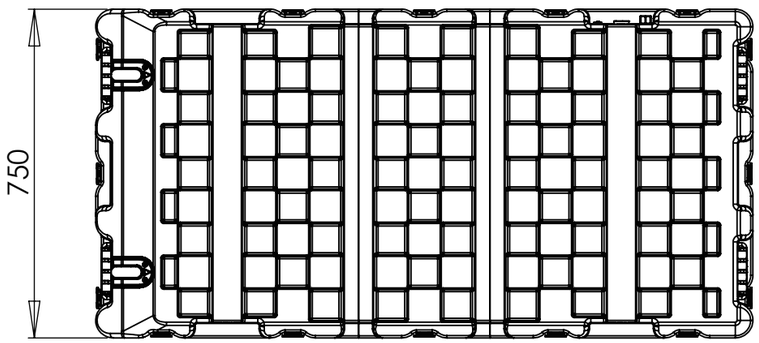

Options Available	Option Selected	Qty	Part #	Nato Stock No (NSN)		
Wheel Kit	Y	01	AAW001	N/A		
AGM Breather Valve	Y	01	AAPRV	Moulding Tolerance +/- (1%+1mm)		
Gore Membrane Vent	Y	01	AAGTV	External Dimensions (mm)		
Humidity Indicator	Y	01	AAHI	Length	Width	Height
Tie Down Anchor	N	00	AATD001	1500	750	450
Padlockable Latch	N	00	AALPLBK	Internal Dimensions (mm)		
Latch	Y	16	AALBK	Length	Width	Height
Plastic Handles	Y	04	AAHPL	1416	666	390

Title			Drg. No.
Amazon Case AC1575-3213/AC			AC1575-3213/AC
Drawn By	Date	Sheet No.	Issue No.
MW	15/07/2010	1 Of 1	1

Dimensions In Millimeters
Do Not Scale

Third Angle Projection

CP Cases Ltd.

Copyright CP Cases Limited.
This drawing is the property of CP Cases Limited & the information on it is confidential & it is not to be used for any other purpose without the prior written consent of CP Cases Limited.