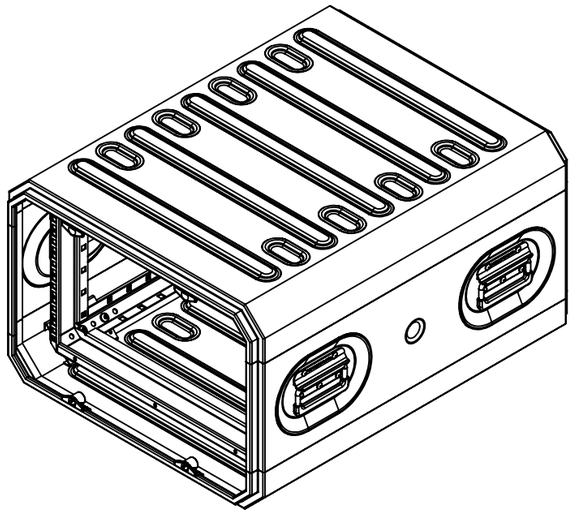

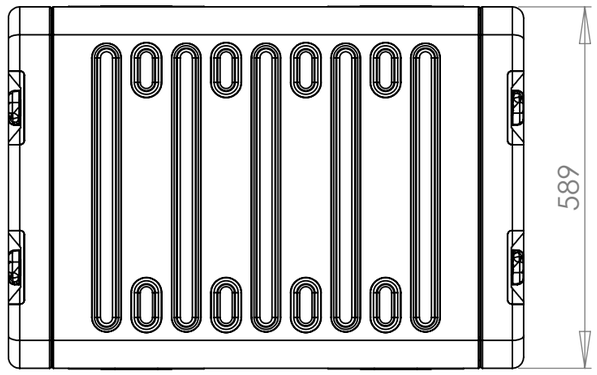

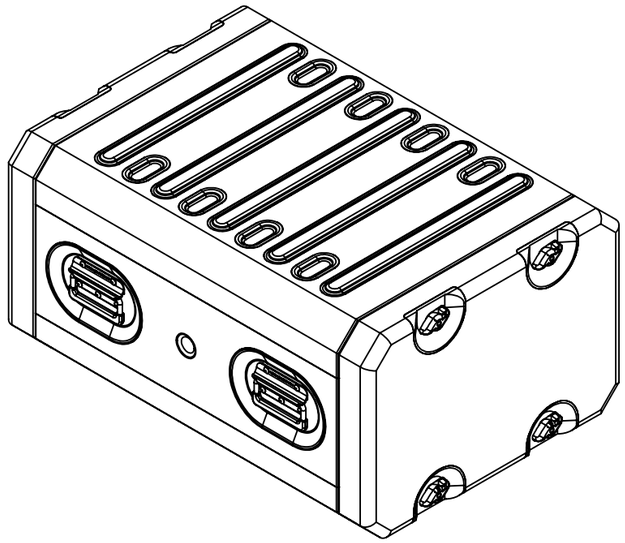

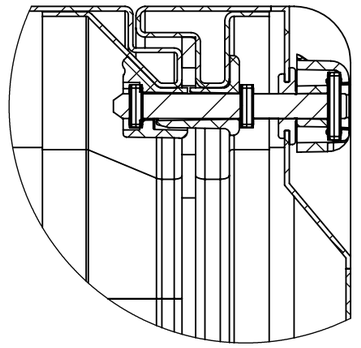

DETAIL B
SCALE 1 : 2

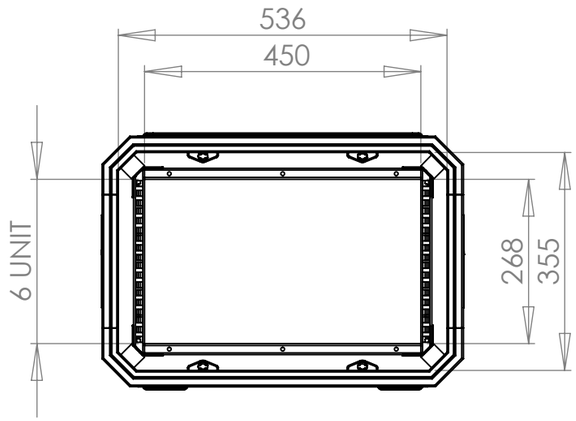

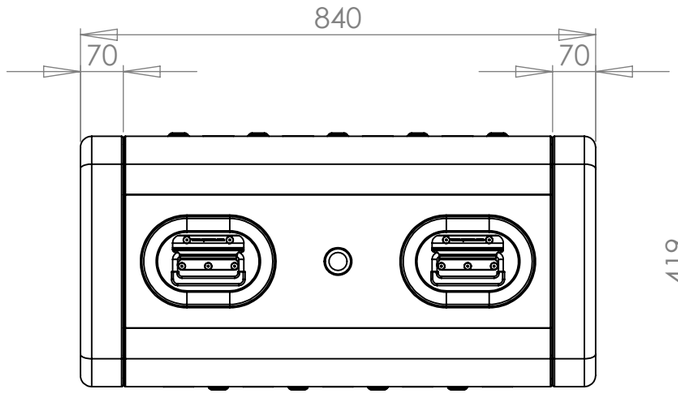

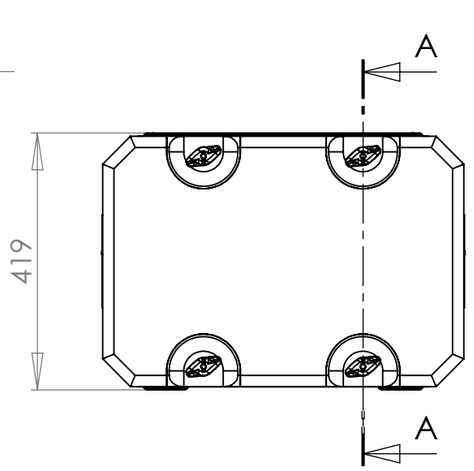

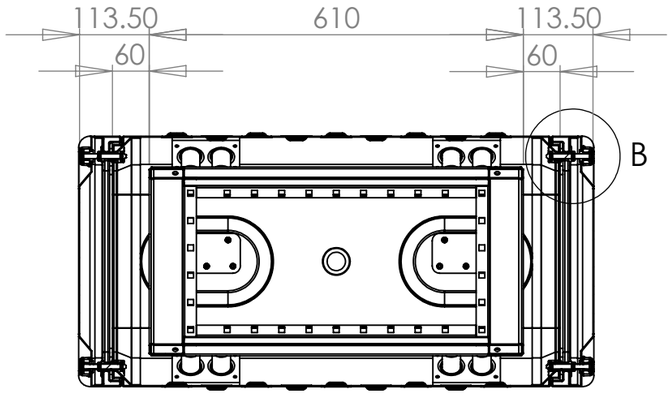

SECTION A-A

Nato Stock No (NSN)		General Tolerance +/- (1%+1mm)			Title			Drg. No.
8145-99-551-8725		External Dimensions (mm)			E-Rack RR0661-0707			RR0661-0707
Options Available	Part #	Height	Width	Depth	Drawn By	Date	Sheet No.	Issue No.
		419	589	840	MW	17/09/2010	1 Of 1	02
					Dimensions In Millimeters		Third Angle Projection	
		Rack Size (U)		06	Do Not Scale			
		Frame Depth (Inches)		610				

CP Cases Ltd.

Copyright CP Cases Limited.
This drawing is the property of CP Cases Limited & the information on it is confidential & it is not to be used for any other purpose without the prior written consent of CP Cases Limited.