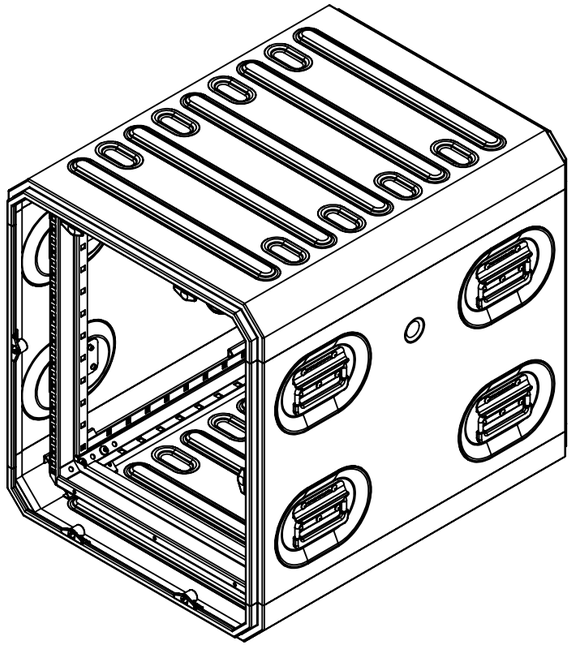

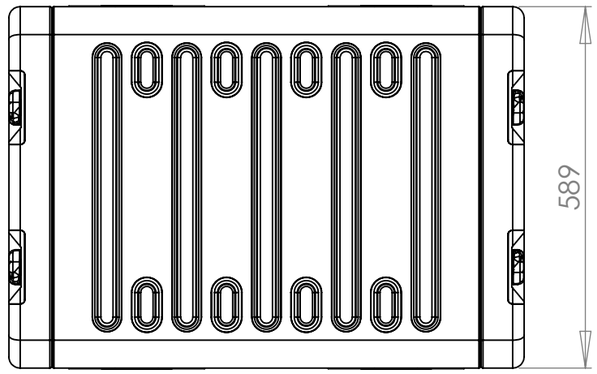

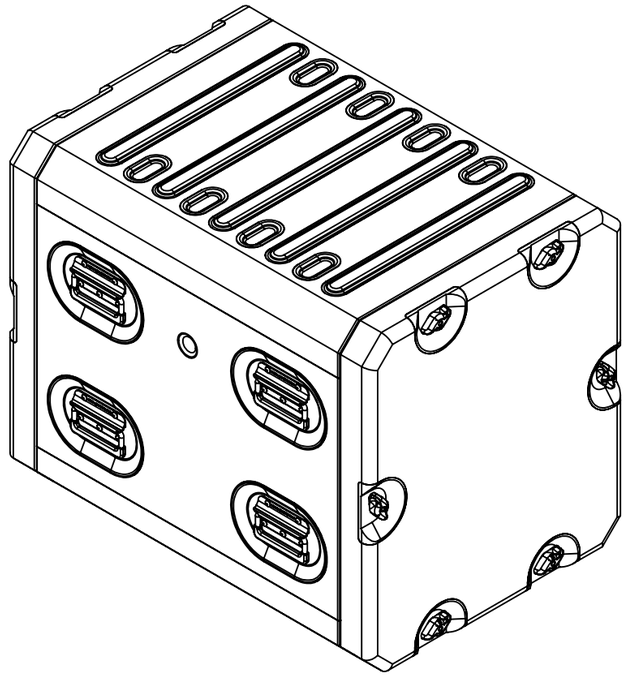

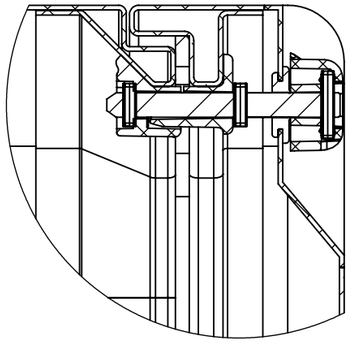

DETAIL B
SCALE 1 : 2

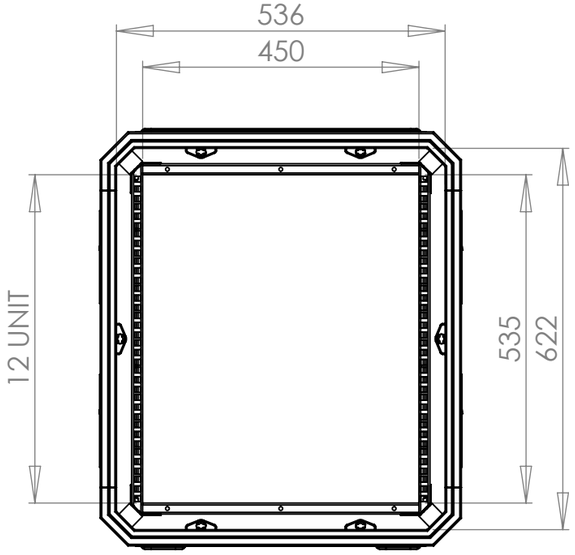

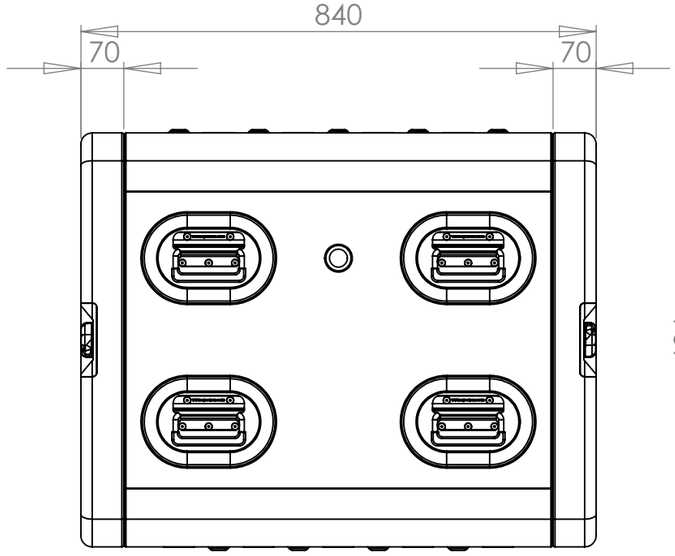

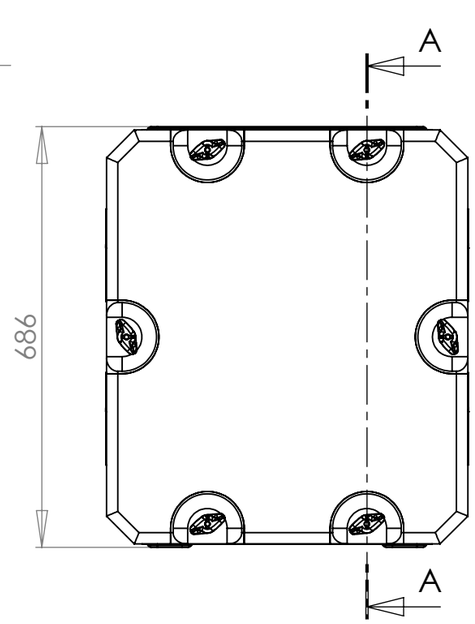

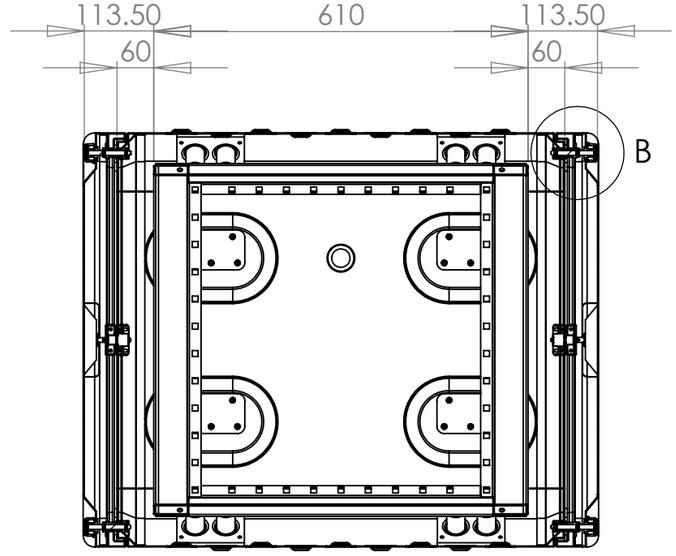

SECTION A-A

Nato Stock No (NSN)		General Tolerance +/- (1%+1mm)			Title		Drg. No.		
8145-99-614-0637		External Dimensions (mm)			E-Rack RR1261-0707		RR1261-0707		
Options Selected	Part #	Height	Width	Depth	Drawn By	Date	Sheet No.	Issue No.	
		686	589	840	MW	17/09/2010	1 Of 1	02	
					Dimensions In Millimeters		Third Angle Projection		
		Rack Size (U)		12	Do Not Scale				
		Frame Depth (Inches)		610					

CP Cases Ltd.

Copyright CP Cases Limited.
This drawing is the property of CP Cases Limited & the information on it is confidential & it is not to be used for any other purpose without the prior written consent of CP Cases Limited.