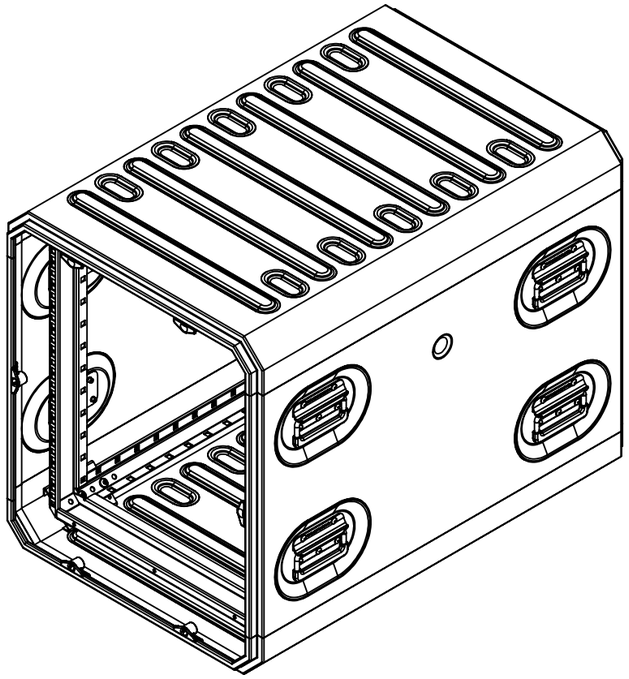

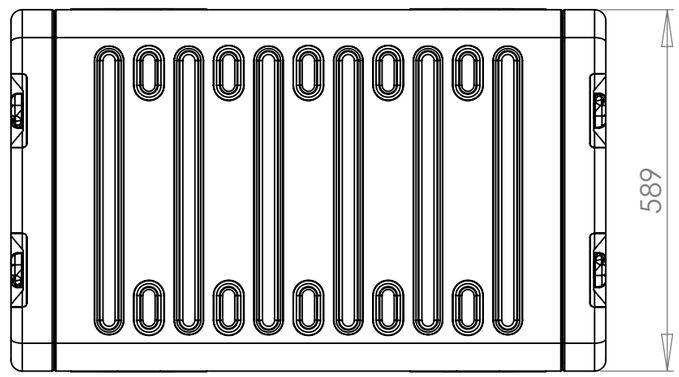

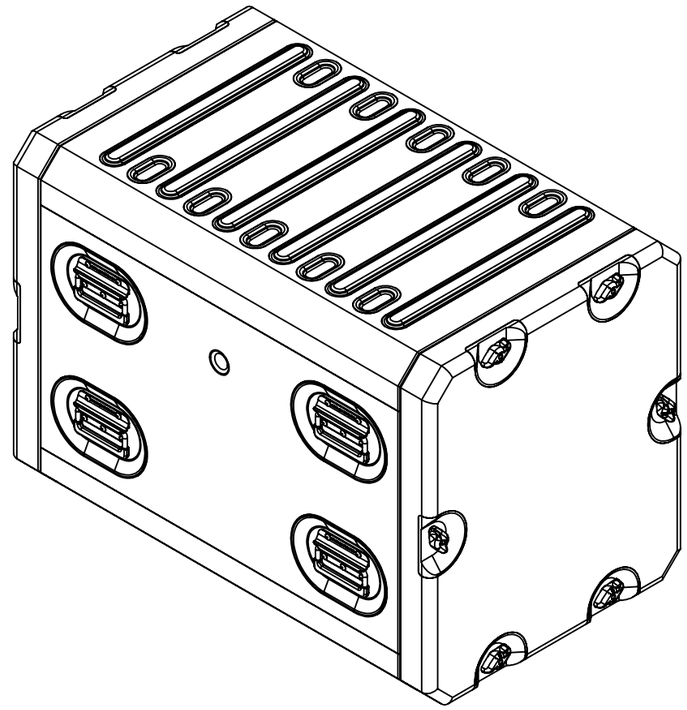

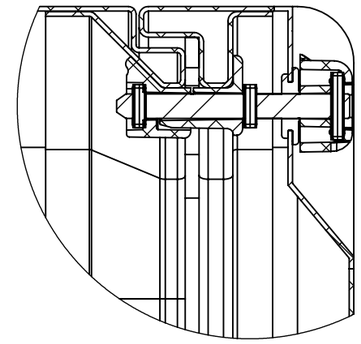

DETAIL B
SCALE 1 : 2

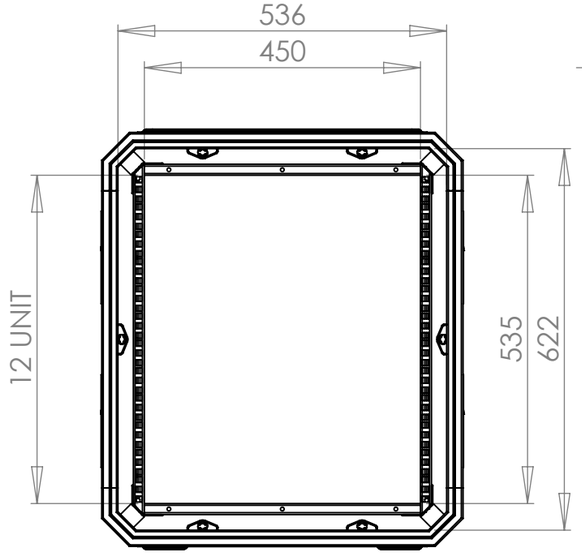

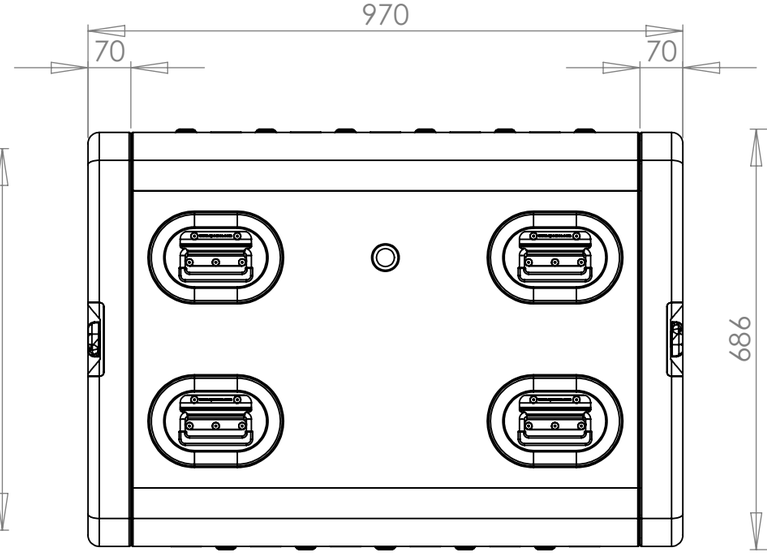

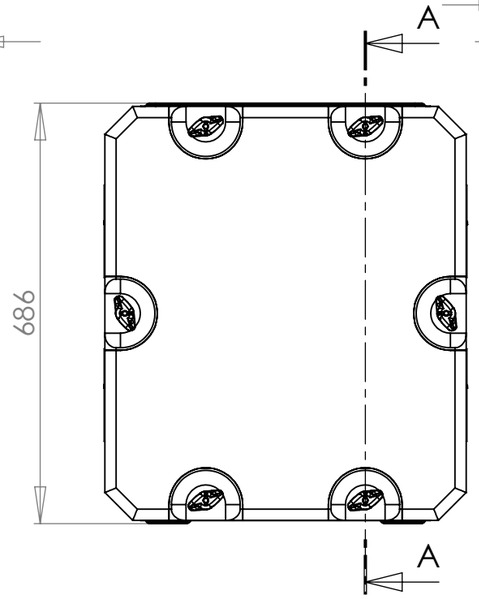

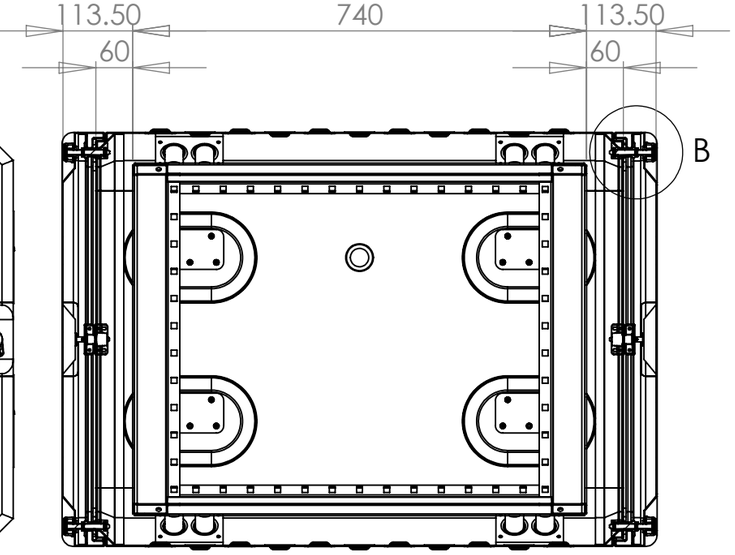

SECTION A-A

Nato Stock No (NSN)				Moulding Tolerance +/- (1%+1mm)			Title			Drg. No.
8145-99-446-7072				External Dimensions (mm)			E-Rack RR1274-0707			RR1274-0707
Options Available	Option Selected	Qty	Part #	Height	Width	Depth	Drawn By	Date	Sheet No.	Issue No.
				686	589	970	MW	20/09/2010	1 Of 1	02
							Dimensions In Millimeters		Third Angle Projection	
				Rack Size (U)		12	Do Not Scale			
				Frame Depth (mm)		740				

CP Cases Ltd.

Copyright CP Cases Limited.
This drawing is the property of CP Cases Limited & the information on it is confidential & it is not to be used for any other purpose without the prior written consent of CP Cases Limited.